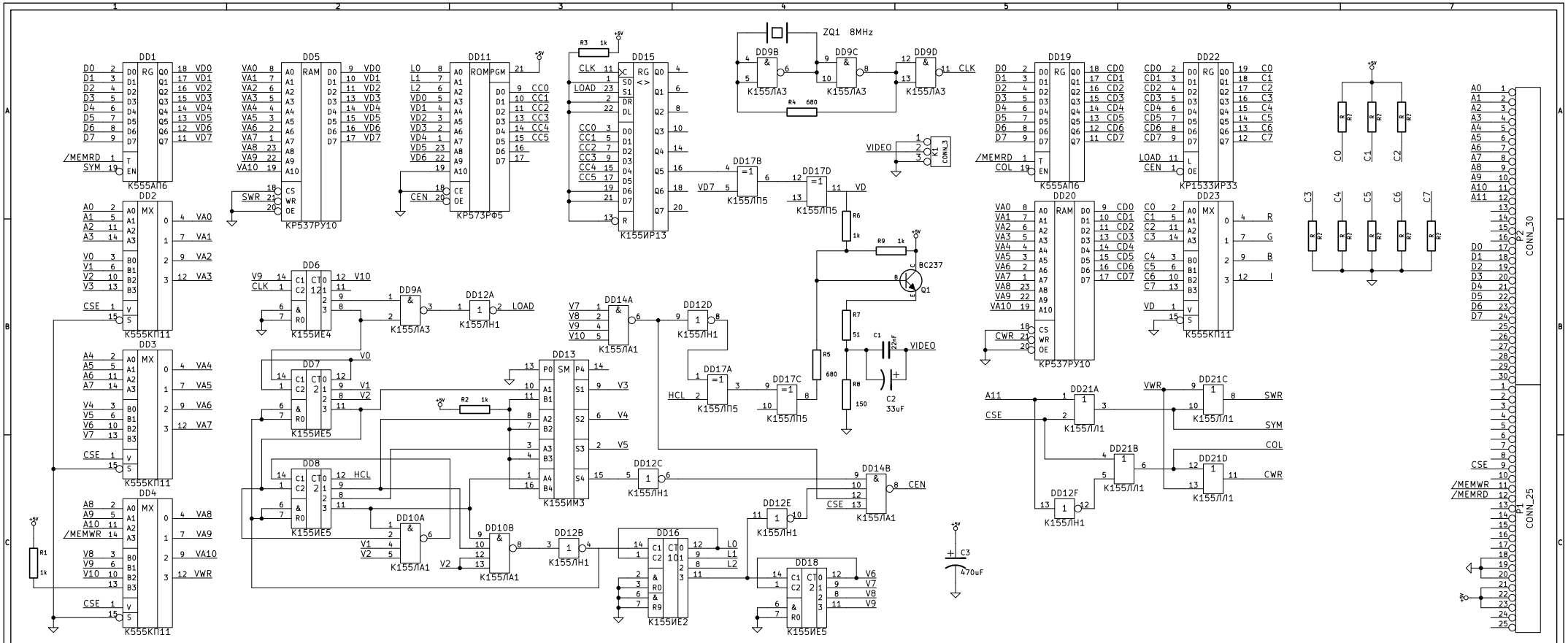

alx32		
File: dysplay.sch		
Sheet: /		
Title: UT-88 Dysplay module		
Size: A3	Date: 18 apr 2013	Rev:
KiCad E.D.A.		Id: 1/1