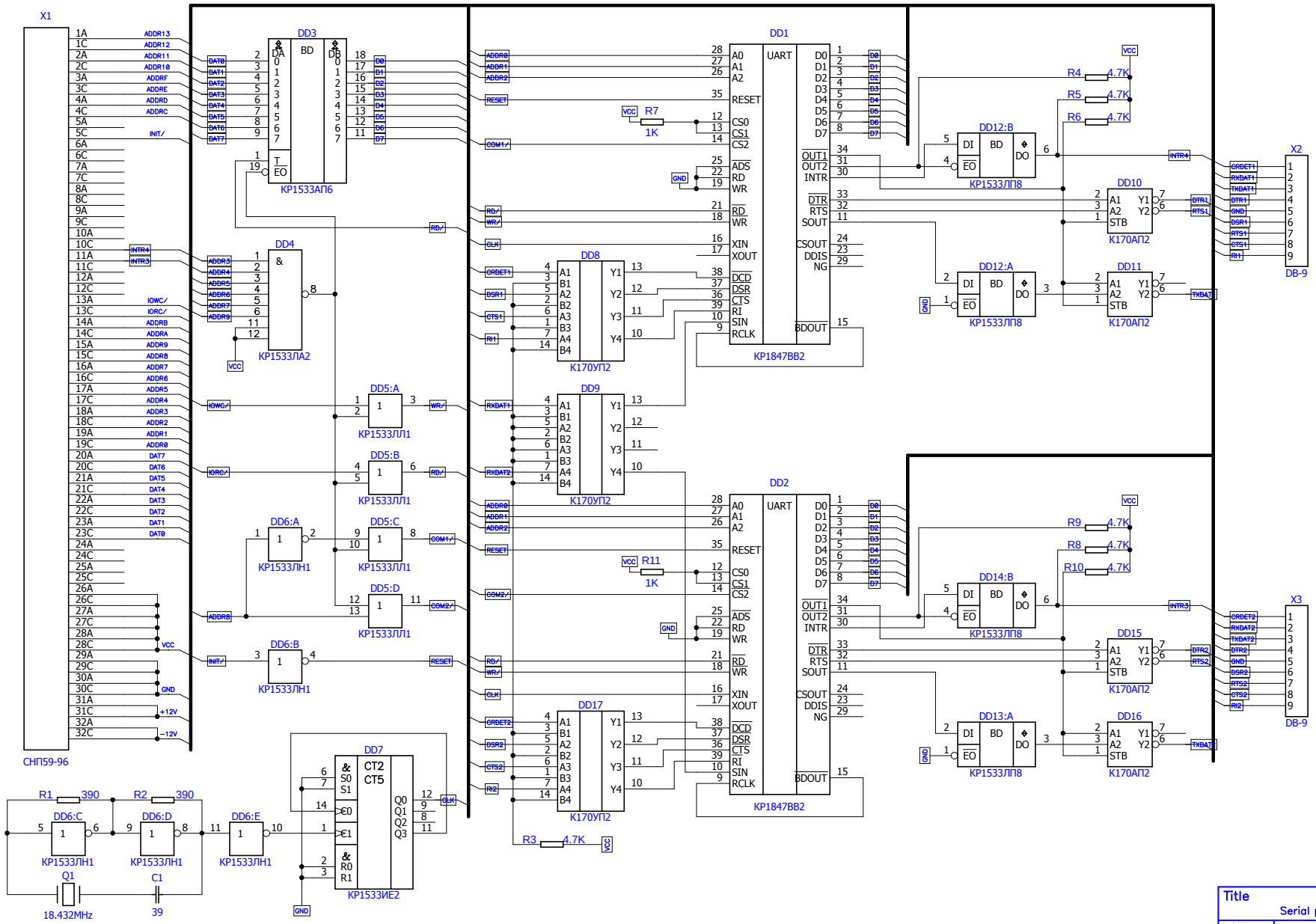


| Title | | |
|---|---|---|
| Serial port adapter for Poisk-1 | | |
| Size | Number | Rev |
| B | Eugene Pelega aka DrPass | |
| Date | Drawn by | |
| Filename | Sheet of | |