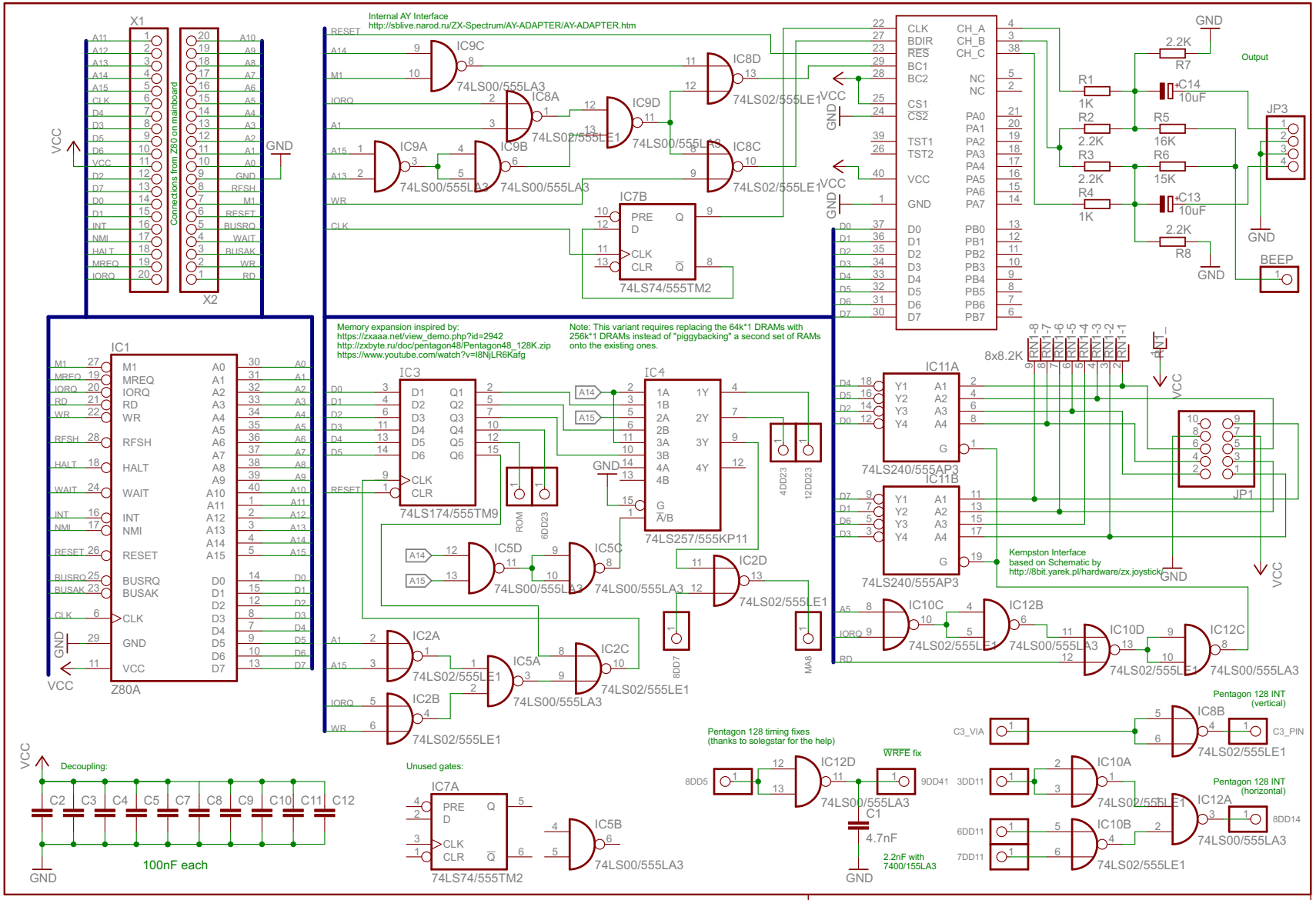

ROM Lock:
1DD2 - disconnect from board, tie to VCC
Use 27256 in DD36, 27256 or 27128 in DD9

MA8 - connect to Pin1 on any DRAM, connect Pin1 on all DRAMs together (underside of the PCB)

ROM - Connect to 27DD36, disconnect pin from board

8DD7 - Solder to pin directly

4DD23 - disconnect from board, solder to pin

6DD23 - disconnect from board, solder to pin

12DD23 - disconnect from board, solder to pin

BEEP - connect to BEEP (beeper muxing on additional audio output)

8DD5 - disconnect from board, solder to pin

9DD41 - solder to pin directly

C3_VIA - Solder to Via

C3_PIN - Lift leg from Via, solder to leg directly disconnected from board

3DD11 - solder to pin directly

6DD11 - solder to pin directly

7DD11 - solder to pin directly

8DD14 - disconnect from board, solder to via directly

TITLE: Mem_K_AY_INT_new2	
Document Number:	REV:
Date: 03.02.2019 17:45:05	Sheet: 1/1