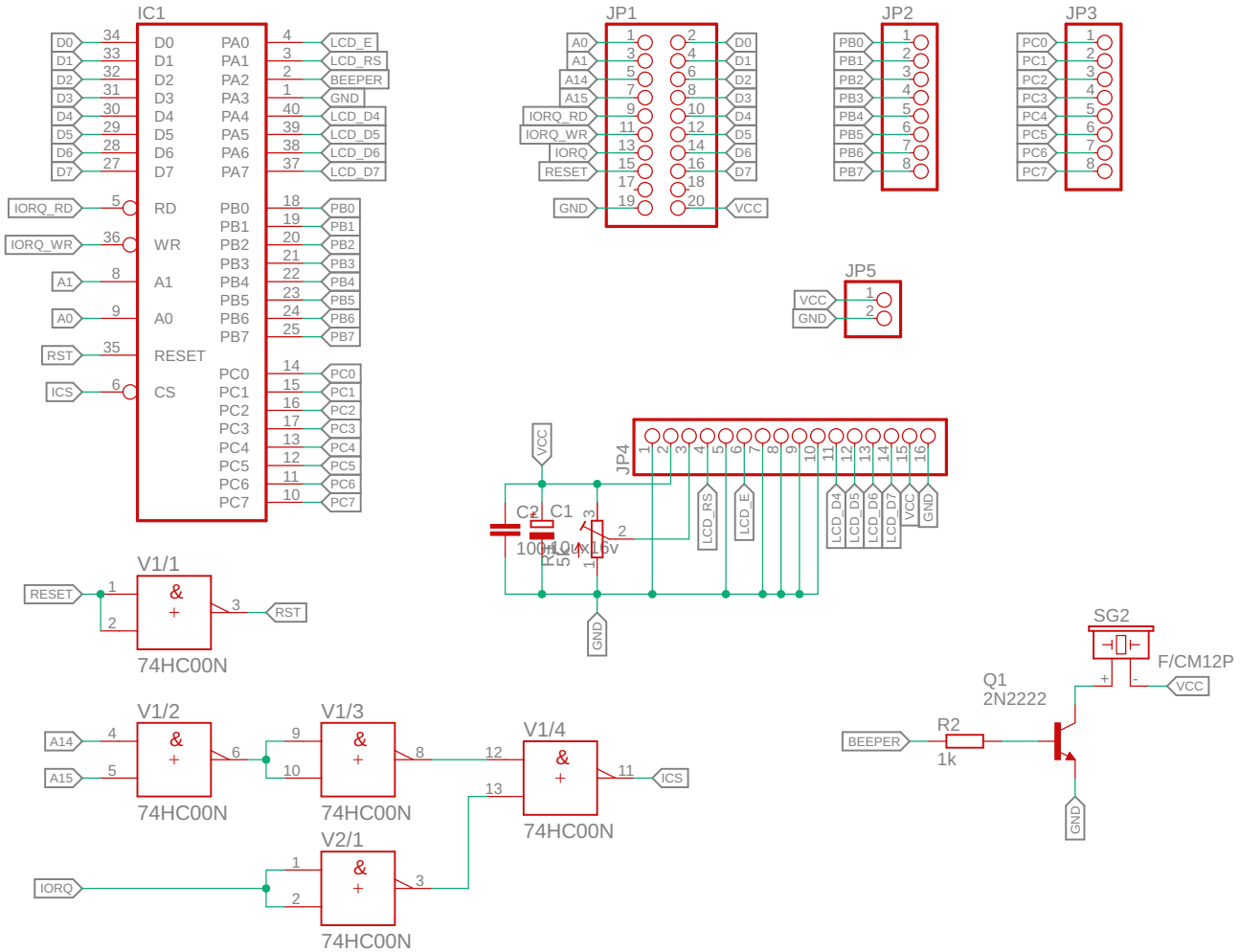
IC1
D0 34 D0 PA0 4 LCD_E
D1 33 D1 PA1 3 LCD_RS
D2 32 D2 PA2 2 BEEPER
D3 31 D3 PA3 1 GND
D4 30 D4 PA4 40 LCD_D4
D5 29 D5 PA5 39 LCD_D5
D6 28 D6 PA6 38 LCD_D6
D7 27 D7 PA7 37 LCD_D7
IORQ_RD 5 RD PB0 18 PB0
PB1 19 PB1
IORQ_WR 36 WR PB2 20 PB2
PB3 21 PB3
A1 8 A1 PB4 22 PB4
PB5 23 PB5
A0 9 A0 PB6 24 PB6
PB7 25 PB7
RST 35 RESET
PC0 14 PC0
ICS 6 CS PC1 15 PC1
PC2 16 PC2
PC3 17 PC3
PC4 13 PC4
PC5 12 PC5
PC6 11 PC6
PC7 10 PC7
JP1
A0 1 2 D0
A1 3 4 D1
A14 5 6 D2
A15 7 8 D3
IORQ_RD 9 10 D4
IORQ_WR 11 12 D5
IORQ 13 14 D6
RESET 15 16 D7
17 18
GND 19 20 VCC
JP2
PB0 1
PB1 2
PB2 3
PB3 4
PB4 5
PB5 6
PB6 7
PB7 8
JP3
PC0 1
PC1 2
PC2 3
PC3 4
PC4 5
PC5 6
PC6 7
PC7 8
JP5
VCC 1
GND 2
JP4
VCC
C2 100nF
C1 10µ x 16v
R1 5.1k
LCD_RS
LCD_E
LCD_D4
LCD_D5
LCD_D6
LCD_D7
VCC
GND
V1/1
RESET 1 & + 3 RST
2
74HC00N
V1/2
A14 4 & + 6
A15 5
74HC00N
V1/3
9 & + 8
10
74HC00N
V1/4
12 & + 11 ICS
13
74HC00N
V2/1
IORQ 1 & + 3
2
74HC00N
SG2
F/CM12P
VCC
Q1
2N2222
BEEPER
R2
1k
GND