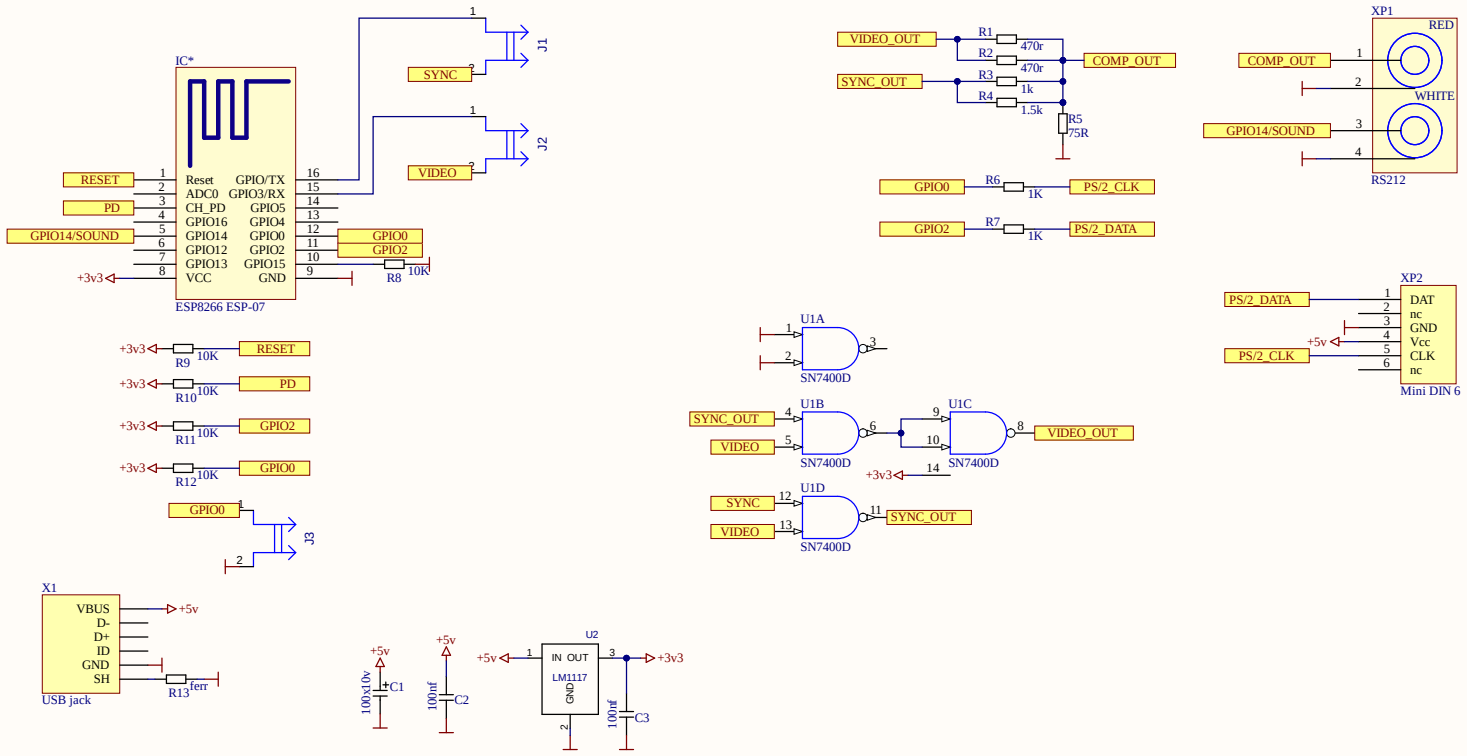

Title		
Size A3	Number	Revision
Date: 12.02.2023		Sheet of
File: D:\Altium\..\Retro_ESP8266.SchDoc		Drawn By: