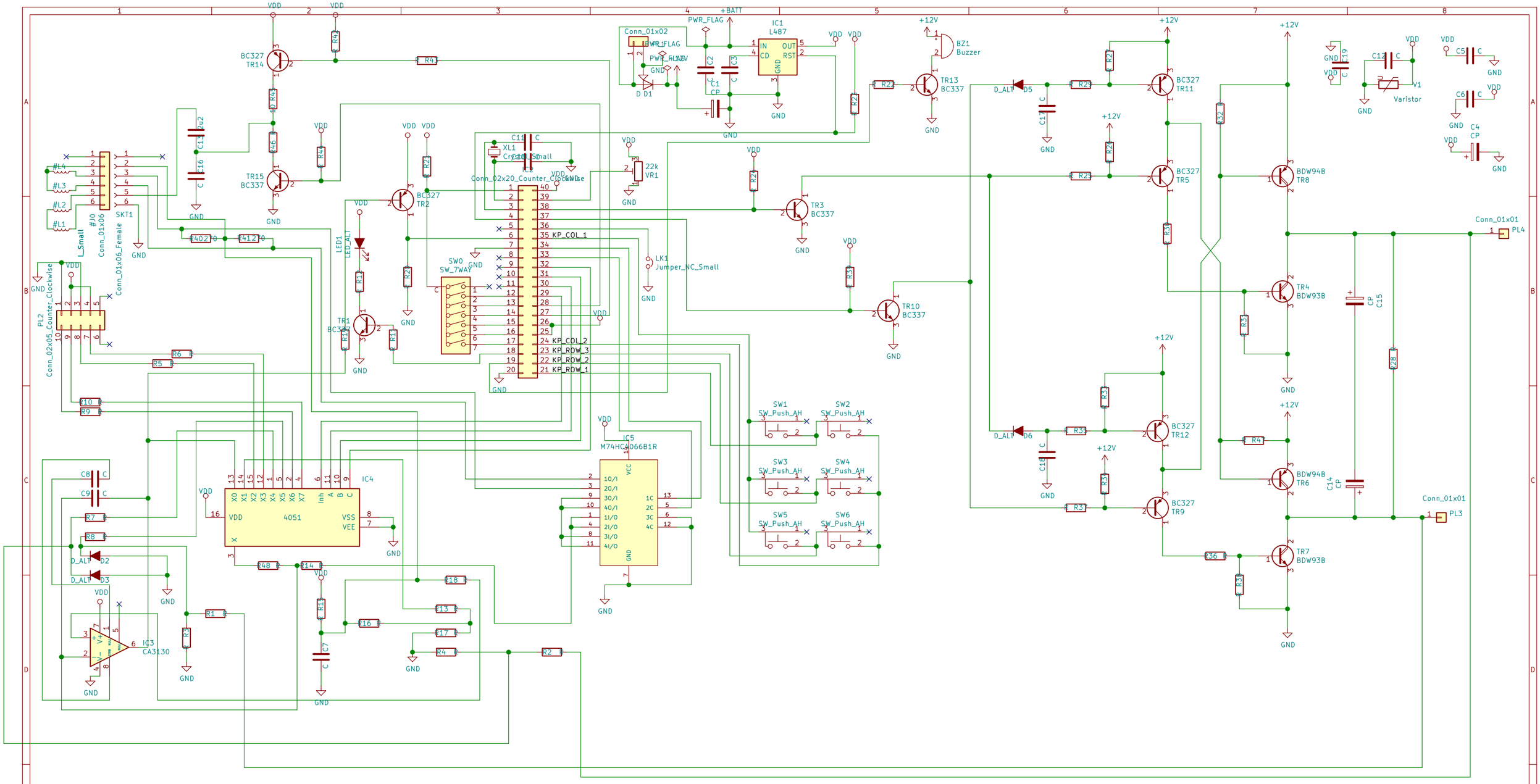

Sheet: /
File: ah3000.sch

Title:

Size: A3	Date:	Rev:
KiCad E.D.A. kicad 6.0.0-rc1-unknown-r14639-e49242bc		Id: 1/1